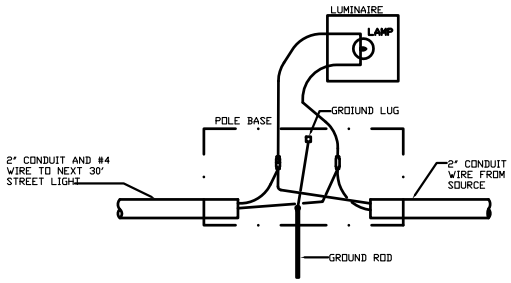

1 Street Light Schematic Wiring Diagram

N.T.S.

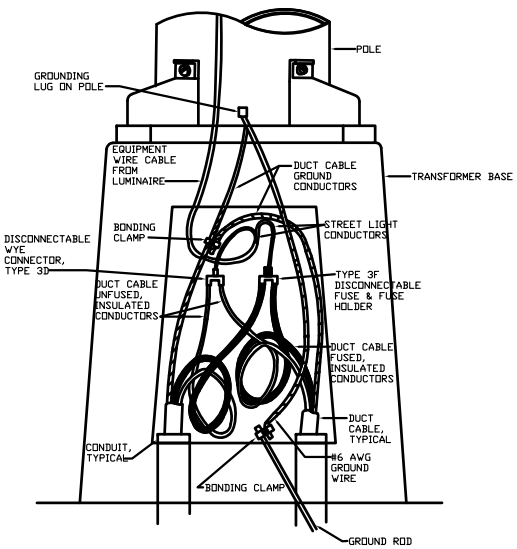

2 Typical Connections in Pole Base

N.T.S.

NOTE:

LEAVE AT LEAST 18" OF SLACK IN EACH CONDUCTOR IN POLE BASE, EXCEPT THAT GROUND WIRE FROM POLE TO GROUND ROD SHALL NOT BE COILED OR KINKED. IT SHALL BE AS DIRECT AS THE DRESSING OF OTHER CONDUCTORS WILL PERMIT.

STREET LIGHT CIRCUIT CHHEDULE

CIRCUIT NUMBER	OH/UG	CONDUIT SIZE/TYPE	SIZE (A.W.G.)	CONDUCTOR TYPE	CONDUCTOR INSULATION	NUMBER OF CONDUCTORS	GROUNDING CONDUCTOR MIN.SIZE CU.(A.W.G.)	FUSE SIZE
L-1	UG	2"	2	Cu	XHHW	2	6	30A
L-2	UG	2"	2	Cu	XHHW	2	6	30A
				Cu	XHHW			30A
				Cu	XHHW			30A
				Cu	XHHW			30A
				Cu	XHHW			30A
				Cu	XHHW			30A
				Cu	XHHW			30A

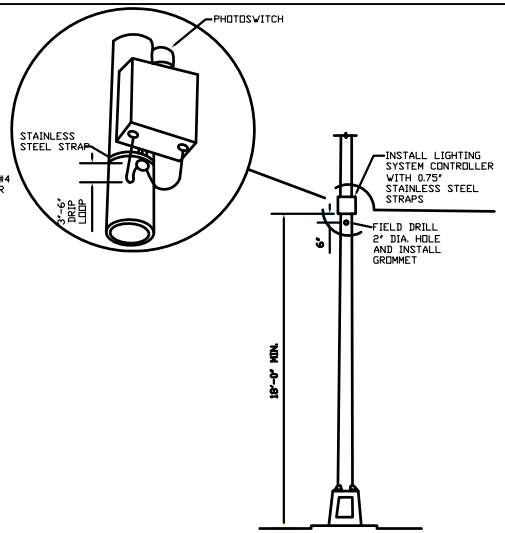

3 Pole Mounted Lighting Controller

N.T.S.

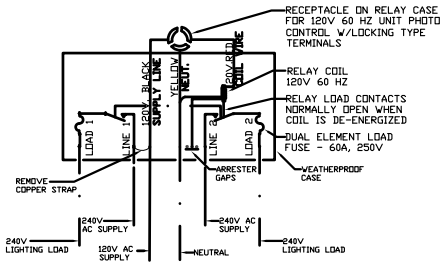

ELECTRICAL SERVICE NOTES:

1. THE CONTROLLER AND ITS PHOTO SWITCH SHALL BE LOCATED SO THAT THE PHOTO SENSOR FACES IN A NORTHERLY DIRECTION SO THAT THE SUNLIGHT HITTING IT IS NOT OBSCURED BY THE PAD MOUNTED EQUIPMENT.
2. THE LIGHTING SYSTEM CONTROLLER SHALL CONSIST OF A PHOTOCELL AND A LIGHTING CONTACTOR TO CONTROL THE 40' STREET LIGHTS. LIGHTING CONTACTOR SHALL BE TRINETICS TYPE MR-UG, SPEC 6338 RATED FOR 240V, SINGLE PHASE, 60 AMPERES PRIMARY WITH 240V, 60 HETRZ CONTROL VOLTAGE AND A PHOTOCELL RECEPTACLE. PROVIDE LIGHTNING ARRESTORS, DUAL ELEMENT FUSES AND A NEMA 3R ENCLOSURE. PROVIDE PHOTOCELL COMPATIBLE WITH SOCKET. WIRE PER MANUFACTURER'S INSTALLATION INSTRUCTIONS.
3. THE CONTRACTOR SHALL COORDINATE WITH THE CITY OF BURLESON AND TXU/ONCOR TO WIRE THE LIGHTING CONTROLLER TO MATCH THE 240V, 1Ø (H, N, G) WITH 120V CONTROL, WHICH IS THE CITY STANDARD STREET LIGHTING VOLTAGE.

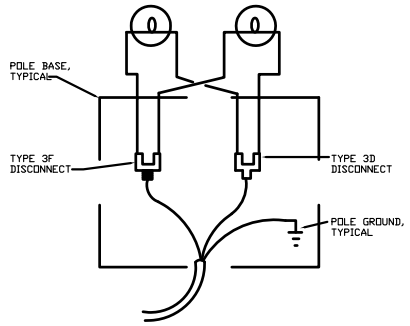

5 Two Luminaires at End of Cable

N.T.S.

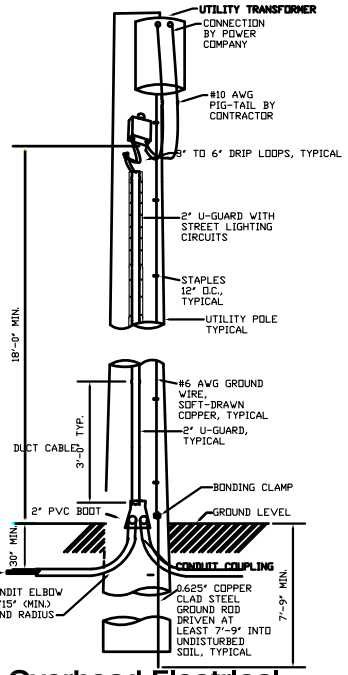

4 Overhead Electrical Service - Existing Utility Pole

N.T.S.

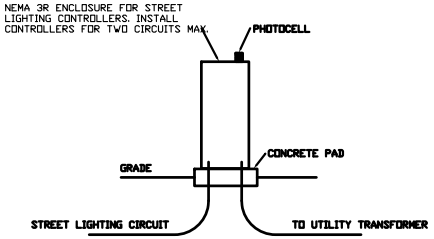

LEGEND:

———	UNDERGROUND WIRE IN 2" PVC
L - 0	CURCUIT NUMBER
	STREET LIGHTS
7-145	TWO # 2 WIRES WITH ONE # 6 BARE GROUND

GENERAL NOTES FOR 40' POLES

PROVIDE BUSSMANN HEB SERIES BREAK-A-WAY, IN-LINE FUSE HOLDERS, CATALOG NO. HEB-A-W-RYC WITH BUSSMANN TYPE KTK5 FUSES, TO PROTECT #12 AWG CONDUCTORS FROM POLE BASE TO LUMINAIRE.

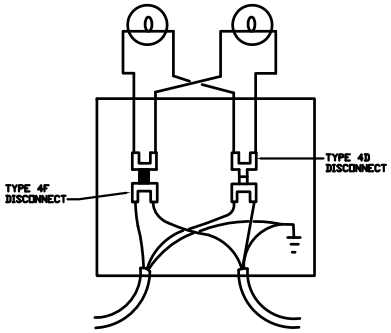

6 Two Luminaires at Location Along Cable

N.T.S.

GENERAL NOTES FOR 40' POLES

1. PROVIDE BUSSMANN HEB SERIES BREAK-A-WAY, IN-LINE FUSE HOLDERS, CATALOG NO. HEB-A-W-RYC WITH BUSSMANN TYPE KTK5 FUSES, TO PROTECT #12 AWG CONDUCTORS FROM POLE BASE TO LUMINAIRE.

P-27a	ELECTRICAL DETAILS STREETLIGHTING	
CITY OF BURLESON		
ORIGINAL	6/6/08	SWC
REVISION		
REVISION		
REVISION		